KINETICS™
Elastomeric Isolators
Model RD

Description
Kinetics Model RD Vibration Isolators are one-piece molded neoprene mounts with encapsulated metal inserts, are color coded to identify capacity, and have non-skid ribs on the bottom load surfaces. Each isolator incorporates two bolt-down holes on the bottom load surface and a tapped steel load top plate for attachment to the supported equipment. The neoprene is highly oil resistant and has been designed to operate within the strain limits of the isolator to provide maximum isolation and longest life expectancy possible using neoprene compounds. Model RD is designed for up to 0.5" (13 mm) deflection, available in four sizes and eleven capacities from 55 lbs. to 4,000 lbs. (25 kg to 1814 kg). Kinetics Model RD is recommended for the isolation of vibration produced by small pumps, vent sets, low pressure packaged air-handling units, etc., and is usually selected when first cost must be minimized.

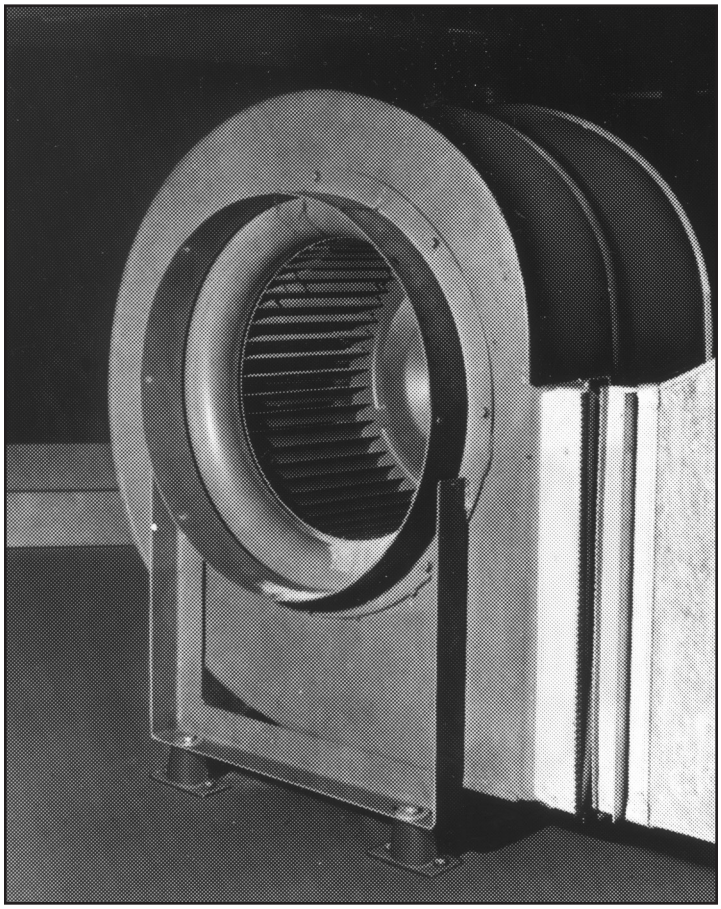

Features
- Molded neoprene isolator
- Cast-in tapped steel load plate
- Cast-in drilled steel anchor/baseplate
- Load capacities 55 pounds to 4000 pounds (25 kg to 1814 kg)

Application
Kinetics Model RD neoprene isolation mounts can be used to isolate noise and high frequency vibration generated by mechanical equipment located on a grade-supported structural slab or pier.

Typical applications of Model RD neoprene isolators are limited to isolation of mechanical equipment having the lowest operating speeds of 1750 RPM when located on a grade-supported slab or pier, and include close-coupled pumps with motors of 5 H.P. or less, small vent sets, low pressure packaged air-handling units, and similar equipment types.

Model RD neoprene isolation mounts can be used for isolation of mechanical equipment specified to be supported by neoprene rubber or elastomer isolators and with tabulated minimum static deflection up to 0.50" (13 mm).

Isolator Type	Color	Duro	Rated Load		Rated Deflection		L		W		A		B		C		D		E		H	
			lbs	kg	in	mm	in	mm	in	mm	in	mm	in	mm	in	mm	in	mm	in	mm	in	mm
RDA-55	Yellow	50	55	25	0.40	10	3.19	81	1.81	46	1.25	32	0.31	8	2.38	60	0.34	9	0.19	5	1.50	38
RDA-125	Blue	70	125	57	0.40	10	3.19	81	1.81	46	1.25	32	0.31	8	2.38	60	0.34	9	0.19	5	1.50	38
RDB-120	Orange	45	120	54	0.50	13	3.88	98	2.38	60	1.75	44	0.38	10	3.00	76	0.34	9	0.25	6	1.75	44
RDB-220	Green	55	220	100	0.50	13	3.88	98	2.38	60	1.75	44	0.38	10	3.00	76	0.34	9	0.25	6	1.75	44
RDB-375	Blue	65	375	170	0.50	13	3.88	98	2.38	60	1.75	44	0.38	10	3.00	76	0.34	9	0.25	6	1.75	44
RDC-250	Yellow	55	250	113	0.50	13	5.50	140	3.25	83	2.50	64	0.50	13	4.13	105	0.56	14	0.25	6	2.50	64
RDC-600	Blue	60	600	272	0.50	13	5.50	140	3.25	83	2.50	64	0.50	13	4.13	105	0.56	14	0.25	6	2.50	64
RDC-1100	White	70	1100	499	0.50	13	5.50	140	3.25	83	2.50	64	0.50	13	4.13	105	0.56	14	0.25	6	2.50	64
RDD-2250	Red	50	2250	1021	0.50	13	6.25	159	4.63	118	3.75	95	0.50	13	5.00	127	0.56	14	0.38	10	2.75	70
RDD-3000	Green	60	3000	1361	0.50	13	6.25	159	4.63	118	3.75	95	0.50	13	5.00	127	0.56	14	0.38	10	2.75	70
RDD-4000	Gray	70	4000	1814	0.50	13	6.25	159	4.63	118	3.75	95	0.50	13	5.00	127	0.56	14	0.38	10	2.75	70

Specifications

Vibration isolators shall be neoprene, molded from oil-resistant compounds, with cast-in-top steel load transfer plate for bolting to supported equipment, and a bolt-down plate with holes provided for anchoring to supporting structure. Bottom surfaces shall have non-skid ribs.

Neoprene vibration isolators shall have minimum operating static deflections as shown on the Vibration Isolation Schedule or as indicated on the project documents but not exceeding published load capabilities.

Neoprene vibration isolators shall be Model RD, as manufactured by Kinetics Noise Control, Inc.

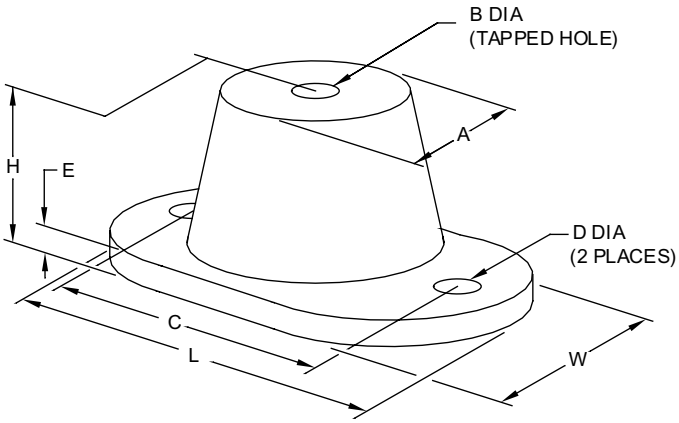

KINETICS Noise Control

kineticsnoise.com
sales@kineticsnoise.com
1-800-959-1229