KINETICS™

Light-Duty Spring Vibration Isolation Hangers

Model SHAA and SHAB

Application

- Fan coil boxes
- Light-duty fans
- Piping
- Duct work

With lighter weight construction materials used in office buildings, schools and hospitals today, it does not take much energy to generate annoying vibration problems. The SHAA and SHAB rubber and spring vibration isolation hangers are designed to provide high-efficiency isolation from structure-borne vibration for lighter point load applications.

It is important the spring is adequately loaded to achieve the desired natural frequency. The SHAA provides 1" (25 mm) deflection at loads of 17 to 71 pounds (8 to 32 kg) and the SHAB provides deflection of 0.5" (13 mm) under loads of 15 to 70 pounds (7 to 32 kg).

The SHAA and SHAB vibration isolation hangers are complete with molded neoprene rubber bottom caps which hold the spring in place, provide protection against short-circuiting due to rod misalignment, and isolate against high frequency vibration from fan blade passage noise.

These vibration isolation hangers are shipped completely assembled and are designed to be used with threaded rod through 3/8" (10 mm) in diameter.

Description

Model SHAA and SHAB spring hangers consist of freestanding, laterally stable steel springs in series with a molded elastomeric element assembled into a stamped and welded hanger bracket.

The hanger brackets are zinc plated and incorporate color-coded spring elements. To assure stability, the spring element has a minimum lateral spring stiffness of 1.0 times the rated vertical stiffness. They will carry a 500% overload without failure.

The spring hangers are available in deflections from 0.5" to 1" (13 mm to 25 mm) and in capacities from 15 to 71 pounds (7 to 32 kg).

	Standard Ratings				Spring Coil					Dimensions							
	Load		Deflection			Free HT.		O.D.		H		W		A		Dmax	
Type	lbs	kg	in	mm	Color	in	mm	in	mm	in	mm	in	mm	in	mm	in	mm
SHAA-1-17	17	8	0.97	25	Blue	2.50	64	1.23	31	3.97	101	2.15	55	1.50	38	0.38	10
SHAA-1-25	25	11	1.04	26	Black	2.50	64	1.23	31	3.97	101	2.15	55	1.50	38	0.38	10
SHAA-1-45	45	20	1.00	26	Brown	2.50	64	1.23	31	3.97	101	2.15	55	1.50	38	0.38	10
SHAA-1-55	55	25	0.92	23	Orange	2.50	64	1.23	31	3.97	101	2.15	55	1.50	38	0.38	10
SHAA-1-71	71	32	0.82	21	Red	2.50	64	1.23	31	3.97	101	2.15	55	1.50	38	0.38	10
SHAA-1-90	90	41	0.78	20	Beige	2.50	64	1.23	31	3.97	101	2.15	55	1.50	38	0.38	10
SHAA-1-130	130	59	0.61	15	White	2.50	64	1.23	31	3.97	101	2.15	55	1.50	38	0.38	10
SHAA-1-270	270	122	0.50	13	Purple	2.50	64	1.23	31	3.97	101	2.15	55	1.50	38	0.38	10
SHAB-15	15	7	0.47	12	Blue	1.50	38	1.23	31	2.72	69	2.15	55	1.50	38	0.38	10
SHAB-30	30	14	0.56	14	Gray	1.50	38	1.23	31	2.72	69	2.15	55	1.50	38	0.38	10
SHAB-50	50	23	0.46	12	Silver	1.50	38	1.23	31	2.72	69	2.15	55	1.50	38	0.38	10
SHAB-70	70	32	0.45	11	Green	1.50	38	1.23	31	2.72	69	2.15	55	1.50	38	0.38	10

Specifications

Vibration isolators for suspended equipment with minimum static deflection requirement exceeding 0.3" (7.5 mm), and where both high and low frequency vibrations are to be isolated, shall be hangers consisting of a laterally stable spring in series with an elastomer spring bottom cap and assembled in a stamped and welded steel bracket.

The stamped and welded bracket shall be finished with an electro-zinc plating. The elastomer insert shall be molded from oilresistant compounds and shall be selected to operate within its published load range.

The spring element shall have a minimum lateral stiffness of 1.0 times the rated vertical stiffness.

Springs shall be color coded or otherwise identified to indicate load capacity.

The hanger bracket shall be designed to carry a 500% overload without failure and to allow a support rod misalignment through a 30° arc without metal-to-metal contact or other short circuit.

Isolation hangers shall be selected by the manufacturer for each specific application to comply with deflection requirements as shown on the Vibration Isolation Schedule or as indicated on the project documents.

The combination isolation hanger assembly with neoprene insert shall be Model SHAA or SHAB, as manufactured by Kinetics Noise Control, Inc.

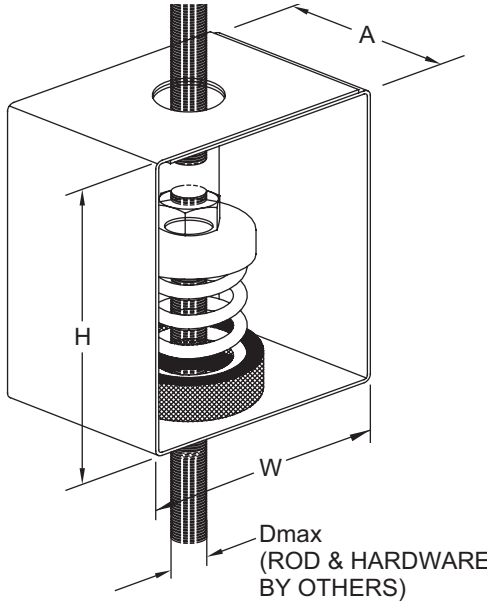

KINETICS Noise Control

kineticsnoise.com/hvac/shaashab.html
sales@kineticsnoise.com
1-800-959-1229

Manufacturing facilities in Ohio, USA; California, USA; and Ontario, Canada. Sales offices worldwide.

Kinetics Noise Control, Inc. is continually upgrading the quality of our products.
We reserve the right to make changes to this and all products without notice.