INSTALLATION INSTRUCTIONS
MODEL CIB-H INERTIA BASE

1. Place inertia base frame in its operating location on a sheet of poly with the rebar located toward the bottom of the base.
   If base has a pan/sheet metal bottom, block base frame across width of base approximately 24" o.c..

2. Locate the anchor bolts in the bolting templates provided with the base frame. (See bolt projection below.) If KNC is to provide the anchor bolts, they will be boxed with the isolators. (In some cases templates may not be provided.)

3. After the anchor bolts have been located, check to insure they match equipment bolting pattern. Then fill the base with concrete and let it cure.

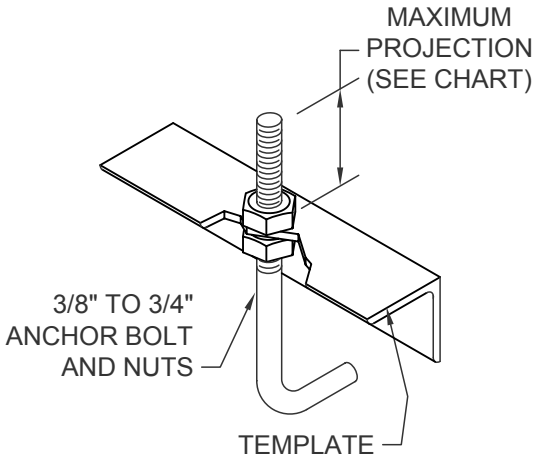

DIA	MAX PROJECTION
3/8	2.5
1/2	2.5
5/8	3.38
3/4	3.25

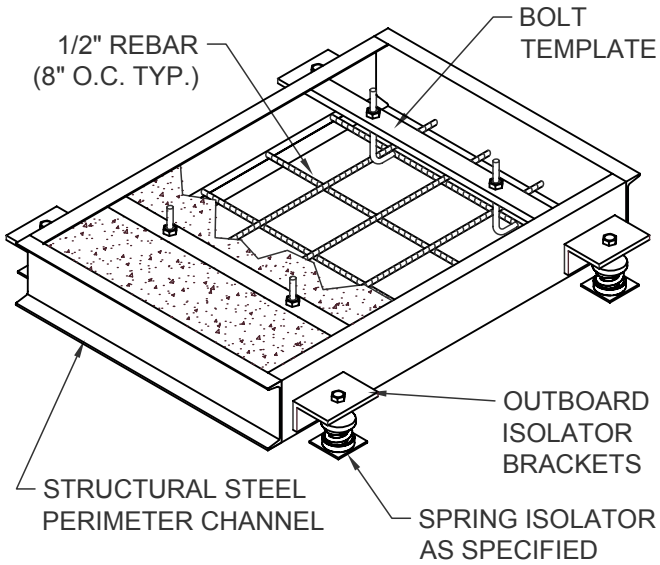

4. When concrete has completely cured, lift up the base high enough to place the isolators under the brackets. Do not lift the entire weight of the base on one bracket.
   Shims are not required when using FHS, FLS or FLSS isolators, the housings will support the base, see INS-01.35-0A or INS-01.22-0A. For pan bottom bases, remove blocking after shimming.

5. Place a shim next to each bracket between the inertia base and the housekeeping pad. Check submittal drawing for correct floor clearance to size shim.

6. Equipment can now be installed on the base.

7. When equipment is mounted and ready to run, the isolators can be adjusted in sequence as follows; turn leveling bolt two to three turns counter clockwise on each isolator until the equipment just comes free from the shim. The shims may be removed.

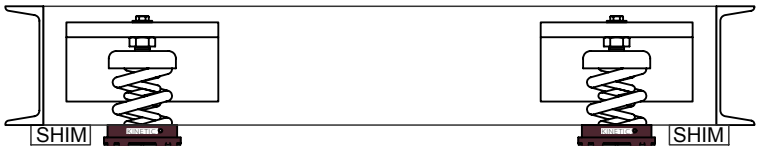

KINETICS Noise Control	LAST DATE REVISED	DRAWN BY	DRAWING NO.	INS-81
	04/27/12	DCB	INS-81.165-3A	